Surge Protective Device Series

Product Catalog

www.grlgroup.com

About GRL

- National High-Tech Enterprise
- Zhejiang Provincial "Specialized, Sophisticated,Distinctive, and Innovative" SME
- Zhejiang Provincial Invisible Champion Enterprise
- Zhejiang Provincial (Key) Enterprise Research Institute
- Zhejiang Provincial Industrial Design Center
- Wenzhou Green Factory

Zhejiang GRL Electric Co., Ltd.Established in 1992, GRL specializes in R&D, production, and sales of fuses, enclosed busway systems, and disconnectors. Our core products include high/low-voltage fuses, disconnectors, enclosed busway systems, new energy copper connections, and surge protectors. These products are widely used in energy storage, charging stations, power grids, photovoltaic/wind power generation, automotive manufacturing, machinery, marine power distribution, and building infrastructure. GRL has provided thousands of electrical components and solutions for new energy, industrial control, power systems, and new infrastructure, establishing itself as a leading brand in electrical connection and protection.

The company operates modern factory facilities spanning over 43,000 square meters, equipped with more than 150 machining equipment units, over 30 specialized production lines, and more than 80 testing devices—including fuse comprehensive characteristic test benches, switch temperature rise test benches, mechanical life test benches, and salt spray test chambers. By implementing scientific production processes and a rigorous quality management system, the company's products have achieved performance standards comparable to international industry benchmarks. Building upon the full adoption of process-oriented and standardized management frameworks, the corporation is actively advancing the development of lean digitalization and a comprehensive employee performance management system.

GRL is committed to advancing electrical safety, reliability, and efficiency while adhering to green development principles and social responsibility. We continuously improve to become a globally respected electrical brand.

Visionaries win the future

Table of Contents

Current Protective Devices	Page
Product Overview	1
Model Designations	1
Ordering Instructions	1
DNU1 Series	2
DNU1PV Series	3
DNU2 Series	4
DNU2H Series	6
DNU2PV Series	8
DNU2PVH Series	9
DNU2Z Series	10
Outline Dimensions	11
Ordering Code List	16

Surge Protective Devices (SPD)

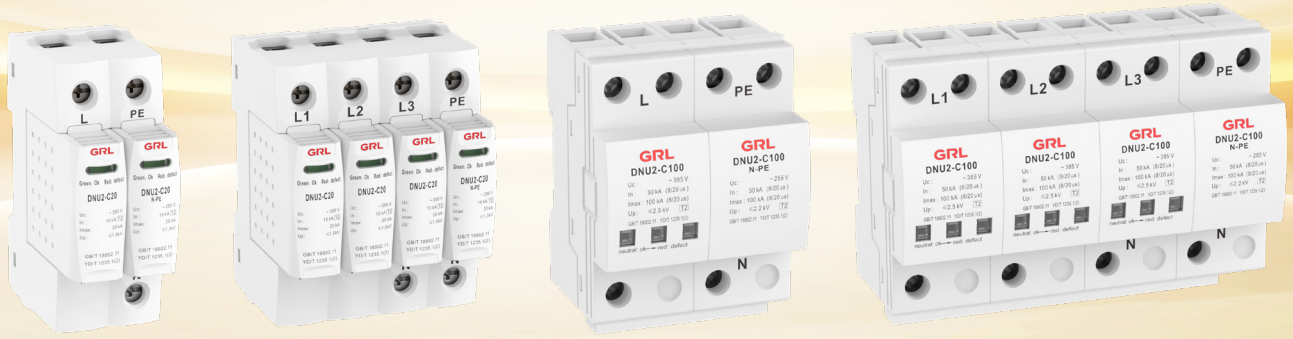

Product Overview

Compact, lightweight modular design with high performance, safe operation, and easy installation. Widely used in telecom stations, postal networks, railway systems, oilfields, high-rise buildings, and photovoltaic systems for protection against indirect/direct lightning strikes and transient overvoltages.

Model Designations

DN U □ □□ - □ □ □ □ □

Communication Contacts (Optional):
1. F: With NO/NC remote signaling contacts
2.None: Without remote signaling

Maximum Operating Voltage

Poles: 1P, 2P, 3P, 4P, 1P+N, 3P+N

Discharge Current:
1.For Type B test: Impulse current (kA)
2.For Type C or B+C test: Maximum discharge current (kA)
3.For Type D test: Open-circuit voltage (kV)

Test Category:B: Class I/T1 | C: Class II/T2
D: Class III/T3 | B+C: Class I+II

SPD Performance: None (Standard)
H (High Performance)

SPD Type: None (AC) | Z (DC) | PV (Photovoltaic DC)

Design Serial Number

SPD

Enterprise Code

Ordering Instructions

Specify:
1.SPD model (e.g., DNU1)
2.Nominal/Maximum discharge current (e.g., In20kA/Imax40kA)
3.Maximum operating voltage (e.g., 385V)
4.Poles (e.g., 4P)
5.Quantity (e.g., 100 units)
Sample Order:
DNU1-C40 385V 4P 100 units
Custom SPD solutions available upon request.

DNU1
Series Surge Protective Device (SPD)

Scope of Application

The DNU1 Series Surge Protective Device (hereinafter referred to as SPD) is designed for low-voltage distribution systems with grid voltages below 1000 V and frequencies of 47-63 Hz (e.g., telecommunications stations, postal networks, railway systems, oilfields, high-rise residential/commercial buildings). It provides protection against indirect/direct lightning strikes or other transient overvoltages/overcurrents, ensuring safer and more reliable power supply for end users.

Operational Principle:

Under normal conditions, the SPD remains in a high-impedance state.

During surge events (caused by lightning or other factors), the SPD conducts within nanoseconds, diverting surge overvoltages/currents to ground to protect connected equipment.

Post-surge, the SPD automatically reverts to its high-impedance state.

Compliant Standards:

GB/T18802.11、IEC61643-11、YD/T1235.1(2)

Technical Specifications

Product Outline Dimensions: See P11; Ordering Code List: See P16

Product Model	DNU1-C20					DNU1-C40					DNU1-C60					DNU1-C80				
Technical Specifications																				
Test Category	T2/II/C					T2/II/C					T2/II/C					T2/II/C				
SPD per IEC 61643-11	Class Ⅱ					Class Ⅱ					Class Ⅱ					Class Ⅱ				
SPD per EN 61643-11	Type 2					Type 2					Type 2					Type 2				
Max. Continuous Operating Voltage (Uc) [V AC]	275	385	440	460	550	275	385	440	460	550	275	385	440	460	550	275	385	440	460	550
Nominal Discharge Current (In) [kA]	10					20					30					40				
Max. Discharge Current (Imax) [kA]	20					40					60					80				
Impulse Current (Iimp, 10/350 μs) [kA]	-	-	-	-	-	-	-	-	-	-	-	-	-	-	-	-	-	-	-	-
Voltage Protection Level (Up) [kV]	1.3	1.6	1.8	2.0	2.2	1.5	1.8	2.0	2.2	2.5	1.6	2.0	2.2	2.5	2.8	1.8	2.2	2.2	2.5	2.8
Pole Configuration	1P、2P、3P、4P																			
Recommended SPD Backup Protector [kA(In)]	10 kA(In)					20 kA(In)					30 kA(In)					40 kA(In)				
Recommended Backup Fuse (gL)	50 A					100 A					125 A					160 A				
Recommended Backup Circuit Breaker	25A~32A					32A~63A					63 A					63 A~100 A				
Additional Parameters																				
Status Indicator	Green (OK)/Red (Defect)																			
Alarm Method	Remote Signaling (Optional)																			
Response Time	⩽25 ns																			
Enclosure Protection Rating	IP20																			
Protection Mode	1-4P:L/N-PE																			
Structure Type	Plug-in																			
Mounting	35 mm standard rail																			
Max. Wire Section for Remote Signaling Terminal	1.5 mm^2 (C:Common, NO:Normally Open, NC:Normally Closed)																			
Terminal Connection (Copper Conductor)	Multi-core: 1.5 mm^2 ~25 mm^2 | Single-core: 1.5 mm^2 ~35 mm^2																			
Torque	Terminal: 2.5 N·m | Remote Signaling Interface: 0.25 N·m																			
Remote Contact Operating Parameters (Max.)	AC: 250 V/0.5 A, 125 V/1 A DC: 250 V/0.1 A, 125 V/0.2 A, 75 A/0.5 A																			
Operating Conditions																				
Ambient Temperature	-40°C～+80°C																			
Relative Humidity	⩽95% (at room temperature)																			
Altitude	⩽3000 m																			
Installation Requirements:	No significant vibration or shock; Tilt angle relative to vertical plane ⩽5%; Avoid explosive atmospheres or environments with corrosive gases/dust (including conductive dust)																			

DNU1PV
Series Surge Protective Device (SPD)

Scope of Application

The DNU1PV Series SPD is designed for photovoltaic power generation systems, providing protection against indirect/direct lightning strikes or other transient overvoltages/overcurrents to ensure safer and more reliable power supply for end users.

Operational Principle:

Under normal conditions, the SPD remains in a high-impedance state.

During surge events (caused by lightning or other factors), the SPD conducts within nanoseconds, diverting surge overvoltages/currents to ground to protect connected equipment.

Post-surge, the SPD automatically reverts to its high-impedance state.

Compliant Standards:

GB/T 18802.31、IEC 61643-31

Technical Specifications

Product Outline Dimensions: See P11; Ordering Code List: See P18

Product Model	DNU1PV-C40					
Technical Specifications						
Test Category	T2/II/C					
SPD per IEC 61643-31	Class II					
SPD per EN 61643-31	Type 2					
Max. Continuous Operating Voltage (Uc) [V DC]	500	600	800	1000	1200	1500
Nominal Discharge Current (In) [kA]	20					
Max. Discharge Current (Imax) [kA]	40					
Impulse Current (Iimp, 10/350 μs) [kA]	-	-	-	-	-	-
Voltage Protection Level (Up) [kV]	2.5	2.8	3.0	3.5	4.0	4.5
Pole Configuration	1P、2P			3P		
Recommended Backup Fuse (gL)	80 A					
Recommended Backup Circuit Breaker	32 A~63 A					
Additional Parameters						
Status Indicator	Green (OK)/Red (Defect)					
Alarm Method	Remote Signaling (Optional)					
Response Time	⩽25 ns					
Enclosure Protection Rating	IP20					
Protection Mode	V+/PE, V-/PE, V+/V-					
Structure Type	Plug-in					
Mounting	35 mm standard rail					
Max. Wire Section for Remote Signaling Terminal	1.5 mm^2 (C:Common, NO:Normally Open, NC:Normally Closed)					
Terminal Connection (Copper Conductor)	Multi-core: 1.5 mm^2 ~25 mm^2 | Single-core: 1.5 mm^2 ~35 mm^2					
Torque	Terminal: 2.5 N·m | Remote Signaling Interface: 0.25 N·m					
Remote Contact Operating Parameters (Max.)	AC: 250 V/0.5 A, 125 V/1 A DC: 250 V/0.1 A, 125 V/0.2 A, 75 A/0.5 A					
Operating Conditions						
Ambient Temperature	-40°C～+80°C					
Relative Humidity	⩽95% (at room temperature)					
Altitude	⩽3000 m					
Installation Requirements:	No significant vibration or shock; Tilt angle relative to vertical plane ⩽5%; Avoid explosive atmospheres or environments with corrosive gases/dust (including conductive dust)					

DNU2
Series Surge Protective Device (SPD)

Scope of Application

The DNU2 Series SPD is designed for low-voltage distribution systems with grid voltages below 1000 V and frequencies of 47-63 Hz (e.g., telecommunications stations, postal networks, railway systems, oilfields, high-rise residential/commercial buildings). It provides protection against indirect/direct lightning strikes or other transient overvoltages/ overcurrents, ensuring safer and more reliable power supply for end users.

Operational Principle:

Under normal conditions, the SPD remains in a high-impedance state.

During surge events (caused by lightning or other factors), the SPD conducts within nanoseconds, diverting surge overvoltages/currents to ground to protect connected equipment.

Post-surge, the SPD automatically reverts to its high-impedance state.

Compliant Standards:

GB/T18802.11、IEC61643-11、YD/T1235.1(2)

Technical Specifications

Product Outline Dimensions: See P12; Ordering Code List: See P19

Product Model	DNU2-C20							DNU2-C40							DNU2-C60							DNU2-C80						
Technical Specifications																												
Test Category	T2/II/C							T2/II/C							T2/II/C							T2/II/C						
SPD per IEC 61643-11	Class II							Class II							Class II							Class II						
SPD per EN 61643-11	Type 2							Type 2							Type 2							Type 2						
Max. Continuous Operating Voltage (Uc) [V AC]	275	385	440	460	550	800	1140	275	385	440	460	550	800	1140	275	385	440	460	550	800	1140	275	385	440	460	550	800	1140
Nominal Discharge Current (In) [kA]	10							20							30							40						
Max. Discharge Current (Imax) [kA]	20							40							60							80						
Impulse Current (Iimp, 10/350 μs) [kA]	-	-	-	-	-	-	-	-	-	-	-	-	-	-	-	-	-	-	-	-	-	-	-	-	-	-	-	-
Voltage Protection Level (Up) [kV]	1.3	1.6	1.8	2.0	2.2	2.5	2.8	1.5	1.8	2.0	2.2	2.5	2.8	3.0	1.6	2.0	2.2	2.5	2.8	3.0	3.5	1.8	2.2	2.2	2.5	2.8	3.0	3.5
Pole Configuration	1P、2P、3P、4P、1P+N、3P+N																											
Recommended SPD Backup Protector [kA(In)]	10 kA(In)							20 kA(In)							30 kA(In)							40 kA(In)						
Recommended Backup Fuse (gL)	50 A							100 A							125 A							160 A						
Recommended Backup Circuit Breaker	25A~32A							32A~63A							63 A							63 A~100 A						
Additional Parameters																												
Status Indicator	Green (OK)/Red (Defect)																											
Alarm Method	Remote Signaling (Optional)																											
Response Time	≤25																											
Enclosure Protection Rating	IP20																											
Protection Mode	1-4P:L/N-PE、1P+N/3P+N：L-N/N-PE																											
Structure Type	Plug-in																											
Mounting	35 mm standard rail																											
Max. Wire Section for Remote Signaling Terminal	1.5 mm^2 (C:Common, NO:Normally Open, NC:Normally Closed)																											
Terminal Connection (Copper Conductor)	Multi-core: 1.5 mm^2 ~25 mm^2 | Single-core: 1.5 mm^2 ~35 mm^2																											
Torque	Terminal: 2.5 N·m | Remote Signaling Interface: 0.25 N·m																											
Remote Contact Operating Parameters (Max.)	AC: 250 V/0.5 A, 125 V/1 A，DC: 250 V/0.1 A, 125 V/0.2 A, 75 A/0.5 A																											
Operating Conditions																												
Ambient Temperature	-40°C～+80°C																											
Relative Humidity	≤95% (at room temperature)																											
Altitude	≤3000 m																											
Installation Requirements	No significant vibration or shock; Tilt angle relative to vertical plane ≤5%; Avoid explosive atmospheres or environments with corrosive gases/dust (including conductive dust)																											

DNU2
Series Surge Protective Device (SPD)

Technical Specifications

Product Outline Dimensions: See P12、13; Ordering Code List: See P19

Product Model	DNU2-C100							DNU2-C120							DNU2-B15			DNU2-B25		
Technical Specifications																				
Test Category	T2/II/C							T2/II/C							T1/I/B			T1/I/B		
SPD per IEC 61643-11	Class II							Class II							Class I			Class I		
SPD per EN 61643-11	Type 2							Type 2							Type 1			Type 1		
Max. Continuous Operating Voltage (Uc) [V AC]	275	385	440	460	550	800	1140	275	385	440	460	550	800	1140	275	385	440	275	385	440
Nominal Discharge Current (In) [kA]	50							60							15			25		
Max. Discharge Current (Imax) [kA]	100							120							-			-		
Impulse Current (Iimp, 10/350 μs) [kA]	-	-	-	-	-	-	-	-	-	-	-	-	-	-	15			25		
Voltage Protection Level (Up) [kV]	2.2	2.5	2.5	2.8	3.0	3.5	3.5	2.2	2.5	2.5	2.8	3.2	3.5	3.5	2.0	2.5	2.5	2.5	2.5	2.5
Pole Configuration	1P、2P、3P、4P、1P+N、3P+N														1P、2P、3P、4P					
Recommended SPD Backup Protector [kA(In)]	50 kA(In)							60 kA(In)							-			-		
Recommended Backup Fuse (gL)	160 A							200 A							125A			160A		
Recommended Backup Circuit Breaker	63A~125A							63A~125A							63A~125A			63A~125A		
Additional Parameters																				
Status Indicator	Colorless (OK)/Red (Defect)														-					
Alarm Method	Remote Signaling (Optional)														-					
Response Time	⩽25														⩽100					
Enclosure Protection Rating	IP20																			
Protection Mode	1-4P:L/N-PE、1P+N/3P+N：L-N/N-PE																			
Structure Type	Fixed																			
Mounting	35 mm standard rail																			
Max. Wire Section for Remote Signaling Terminal	1.5 mm^2 (C:Common, NO:Normally Open, NC:Normally Closed)																			
Terminal Connection (Copper Conductor)	Multi-core: 1.5 mm^2 ~25 mm^2 | Single-core: 1.5 mm^2 ~35 mm^2																			
Torque	2.5 N•m /0.25 N•m																			
Remote Contact Operating Parameters (Max.)	AC: 250 V/0.5 A, 125 V/1 A DC: 250 V/0.1 A, 125 V/0.2 A, 75 A/0.5 A																			
Operating Conditions																				
Ambient Temperature	-40°C～+80°C																			
Relative Humidity	⩽95% (at room temperature)																			
Altitude	⩽3000 m																			
Installation Requirements	No significant vibration or shock; Tilt angle relative to vertical plane ⩽5%; Avoid explosive atmospheres or environments with corrosive gases/dust (including conductive dust)																			

DNU2H
Series Surge Protective Device (SPD)

Scope of Application

The DNU2H Series SPD is designed for low-voltage distribution systems with grid voltages below 1000 V and frequencies of 47-63 Hz (e.g., telecommunications stations, postal networks, railway systems, oilfields, high-rise residential/commercial buildings). It provides protection against indirect/direct lightning strikes or other transient overvoltages/ overcurrents, ensuring safer and more reliable power supply for end users.

Operational Principle:

Under normal conditions, the SPD remains in a high-impedance state.

During surge events (caused by lightning or other factors), the SPD conducts within nanoseconds, diverting surge overvoltages/currents to ground to protect connected equipment.

Post-surge, the SPD automatically reverts to its high-impedance state.

Compliant Standards:

GB/T18802.11、IEC61643-11、YD/T1235.1(2)

Technical Specifications

Product Outline Dimensions: See P13; Ordering Code List: See P23

Product Model	DNU2H-C20					DNU2H-C40					DNU2H-C60					DNU2H-C80				
Technical Specifications																				
Test Category	T2/II/C					T2/II/C					T2/II/C					T2/II/C				
SPD per IEC 61643-11	Class II					Class II					Class II					Class II				
SPD per EN 61643-11	Type 2					Type 2					Type 2					Type 2				
Max. Continuous Operating Voltage (Uc) [V AC]	275	385	440	460	550	275	385	440	460	550	275	385	440	460	550	275	385	440	460	550
Nominal Discharge Current (In) [kA]	10					20					30					40				
Max. Discharge Current (Imax) [kA]	20					40					60					80				
Impulse Current (Iimp, 10/350 μs) [kA]	-	-	-	-	-	-	-	-	-	-	-	-	-	-	-	-	-	-	-	-
Voltage Protection Level (Up) [kV]	1.3	1.6	1.8	2.0	2.2	1.5	1.8	2.0	2.2	2.5	1.6	2.0	2.2	2.5	2.8	1.8	2.2	2.2	2.5	2.8
Pole Configuration	1P、2P、3P、4P、1P+N、3P+N																			
Recommended SPD Backup Protector [kA(In)]	10 kA(In)					20 kA(In)					30 kA(In)					40 kA(In)				
Recommended Backup Fuse (gL)	50 A					100 A					125 A					160 A				
Recommended Backup Circuit Breaker	25A~32A					32A~63A					63 A					63 A~100 A				
Additional Parameters																				
Status Indicator	Green (OK)/Red (Defect)																			
Alarm Method	Remote Signaling (Optional)																			
Response Time	≤25																			
Enclosure Protection Rating	IP20																			
Protection Mode	1-4P:L/N-PE、1P+N/3P+N：L-N/N-PE																			
Structure Type	Plug-in																			
Mounting	35 mm standard rail																			
Max. Wire Section for Remote Signaling Terminal	1.5 mm^2 (C:Common, NO:Normally Open, NC:Normally Closed)																			
Terminal Connection (Copper Conductor)	Multi-core: 1.5 mm^2 ~25 mm^2 | Single-core: 1.5 mm^2 ~35 mm^2																			
Torque	Terminal: 2.5 N·m | Remote Signaling Interface: 0.25 N·m																			
Remote Contact Operating Parameters (Max.)	AC: 250 V/0.5 A, 125 V/1 A DC: 250 V/0.1 A, 125 V/0.2 A, 75 A/0.5 A																			
Operating Conditions																				
Ambient Temperature	-40°C～+80°C																			
Relative Humidity	≤95% (at room temperature)																			
Altitude	≤3000 m																			
Installation Requirements:	No significant vibration or shock; Tilt angle relative to vertical plane ≤5%; Avoid explosive atmospheres or environments with corrosive gases/dust (including conductive dust)																			

DNU2H
Series Surge Protective Device (SPD)

Technical Specifications

Product Outline Dimensions: See P14; Ordering Code List: See P23

Product Model	DNU2H-C100					DNU2H-C120				
Technical Specifications										
Test Category	T2/II/C					T2/II/C				
SPD per IEC 61643-11	Class II					Class II				
SPD per EN 61643-11	Type 2					Type 2				
Max. Continuous Operating Voltage (Uc) [V AC]	275	385	440	460	550	275	385	440	460	550
Nominal Discharge Current (In) [kA]	50					60				
Max. Discharge Current (Imax) [kA]	100					120				
Impulse Current (Iimp, 10/350 μs) [kA]	-	-	-	-	-	-	-	-	-	-
Voltage Protection Level (Up) [kV]	2.2	2.5	2.5	2.8	3.0	2.2	2.5	2.5	2.8	3.2
Pole Configuration	1P、2P、3P、4P、1P+N、3P+N									
Recommended SPD Backup Protector [kA(In)]	50 kA(In)					60 kA(In)				
Recommended Backup Fuse (gL)	160 A					200 A				
Recommended Backup Circuit Breaker	63A~125A					63A~125A				
Additional Parameters										
Status Indicator	Colorless (OK)/Red (Defect)									
Alarm Method	Remote Signaling (Optional)									
Response Time	≤25									
Enclosure Protection Rating	IP20									
Protection Mode	1-4P:L/N-PE、1P+N/3P+N：L-N/N-PE									
Structure Type	Fixed									
Mounting	35 mm standard rail									
Max. Wire Section for Remote Signaling Terminal	1.5 mm^2 (C:Common, NO:Normally Open, NC:Normally Closed)									
Terminal Connection (Copper Conductor)	Multi-core: 1.5 mm^2 ~25 mm^2 | Single-core: 1.5 mm^2 ~35 mm^2									
Torque	Terminal: 2.5 N·m | Remote Signaling Interface: 0.25 N·m									
Remote Contact Operating Parameters (Max.)	AC: 250 V/0.5 A, 125 V/1 A DC: 250 V/0.1 A, 125 V/0.2 A, 75 A/0.5 A									
Operating Conditions										
Ambient Temperature	-40°C～+80°C									
Relative Humidity	≤95% (at room temperature)									
Altitude	≤3000 m									
Installation Requirements:	No significant vibration or shock; Tilt angle relative to vertical plane ≤5%; Avoid explosive atmospheres or environments with corrosive gases/dust (including conductive dust)									

DNU2PV
Series Surge Protective Device (SPD)

Scope of Application

The DNU2PV Series SPD is designed for photovoltaic power generation systems, providing protection against indirect/direct lightning strikes or other transient overvoltages/overcurrents, ensuring safer and more reliable power supply for end users.

Operational Principle:

Under normal conditions, the SPD remains in a high-impedance state.

During surge events (caused by lightning or other factors), the SPD conducts within nanoseconds, diverting surge overvoltages/currents to ground to protect connected equipment.

Post-surge, the SPD automatically reverts to its high-impedance state.

Compliant Standards:

GB/T 18802.31、IEC 61643-31

Technical Specifications

Product Outline Dimensions: See P14; Ordering Code List: See P26

Product Model	DNU2PV-C40						DNU2PV-B+C40					
Technical Specifications												
Test Category	T2/II/C						T1/I/B and T2/II/C					
SPD per IEC 61643-31	Class II						Class I and Class II					
SPD per EN 61643-31	Type 2						Type 1 and Type 2					
Max. Continuous Operating Voltage (Uc) [V DC]	500	600	800	1000	1200	1500	500	600	800	1000	1200	1500
Nominal Discharge Current (In) [kA]	20						20					
Max. Discharge Current (Imax) [kA]	40						40					
Impulse Current (Iimp, 10/350 μs) [kA]	-	-	-	-	-	-	7	4	3	7	4.5	3
Voltage Protection Level (Up) [kV]	2.5	2.8	3.0	3.5	4.0	4.5	2.5	2.8	3.0	3.5	4.0	4.5
Pole Configuration	1P、2P			3P			1P、2P			3P		
Recommended Backup Fuse (gL)	80 A						80 A					
Recommended Backup Circuit Breaker	32A~63A						32A~63A					
Additional Parameters												
Status Indicator	Green (OK)/Red (Defect)											
Alarm Method	Remote Signaling (Optional)											
Response Time	≤25											
Enclosure Protection Rating	IP20											
Protection Mode	V+/PE, V-/PE, V+/V-											
Structure Type	Plug-in											
Mounting	35 mm standard rail											
Max. Wire Section for Remote Signaling Terminal	1.5 mm^2 (C:Common, NO:Normally Open, NC:Normally Closed)											
Terminal Connection (Copper Conductor)	Multi-core: 1.5 mm^2 ~25 mm^2 | Single-core: 1.5 mm^2 ~35 mm^2											
Torque	Terminal: 2.5 N·m | Remote Signaling Interface: 0.25 N·m											
Remote Contact Operating Parameters (Max.)	AC: 250 V/0.5 A, 125 V/1 A DC: 250 V/0.1 A, 125 V/0.2 A, 75 A/0.5 A											
Operating Conditions												
Ambient Temperature	-40°C～+80°C											
Relative Humidity	≤95% (at room temperature)											
Altitude	≤3000 m											
Installation Requirements:	No significant vibration or shock; Tilt angle relative to vertical plane ≤5%; Avoid explosive atmospheres or environments with corrosive gases/dust (including conductive dust)											

DNU2PVH
Series Surge Protective Device (SPD)

Scope of Application

The DNU2PVH Series SPD is designed for photovoltaic power generation systems, providing protection against indirect/direct lightning strikes or other transient overvoltages/overcurrents, ensuring safer and more reliable power supply for end users.

Operational Principle:

Under normal conditions, the SPD remains in a high-impedance state.

During surge events (caused by lightning or other factors), the SPD conducts within nanoseconds, diverting surge overvoltages/currents to ground to protect connected equipment.

Post-surge, the SPD automatically reverts to its high-impedance state.

Compliant Standards:

GB/T 18802.31、IEC 61643-31

Technical Specifications

Product Outline Dimensions: See P15; Ordering Code List: See P27

Product Model	DNU2PVH-C40						DNU2PVH-B+C40					
Technical Specifications												
Test Category	T2/II/C						T1/I/B and T2/II/C					
SPD per IEC 61643-31	Class II						Class I and Class II					
SPD per EN 61643-31	Type 2						Type 1 and Type 2					
Max. Continuous Operating Voltage (Uc) [V DC]	500	600	800	1000	1200	1500	500	600	800	1000	1200	1500
Nominal Discharge Current (In) [kA]	20						20					
Max. Discharge Current (Imax) [kA]	40						40					
Impulse Current (Iimp, 10/350 μs) [kA]	-	-	-	-	-	-	7	4	3	7	4.5	3
Voltage Protection Level (Up) [kV]	2.5	2.8	3.0	3.5	4.0	4.5	2.5	2.8	3.0	3.5	4.0	4.5
Pole Configuration	1P、2P			3P			1P、2P			3P		
Recommended Backup Fuse (gL)	80 A						80 A					
Recommended Backup Circuit Breaker	32A~63A						32A~63A					
Additional Parameters												
Status Indicator	Green (OK)/Red (Defect)											
Alarm Method	Remote Signaling (Optional)											
Response Time	≤25											
Enclosure Protection Rating	IP20											
Protection Mode	V+/PE, V-/PE, V+/V-											
Structure Type	Plug-in											
Mounting	35 mm standard rail											
Max. Wire Section for Remote Signaling Terminal	1.5 mm^2 (C:Common, NO:Normally Open, NC:Normally Closed)											
Terminal Connection (Copper Conductor)	Multi-core: 1.5 mm^2 ~25 mm^2 | Single-core: 1.5 mm^2 ~35 mm^2											
Torque	Terminal: 2.5 N·m | Remote Signaling Interface: 0.25 N·m											
Remote Contact Operating Parameters (Max.)	AC: 250 V/0.5 A, 125 V/1 A DC: 250 V/0.1 A, 125 V/0.2 A, 75 A/0.5 A											
Operating Conditions												
Ambient Temperature	-40°C～+80°C											
Relative Humidity	≤95% (at room temperature)											
Altitude	≤3000 m											
Installation Requirements:	No significant vibration or shock; Tilt angle relative to vertical plane ≤5%; Avoid explosive atmospheres or environments with corrosive gases/dust (including conductive dust)											

DNU2Z Series Low-Voltage Distribution System DC Surge Protective Device (SPD)

Scope of Application

The DNU2Z Series SPD is designed for DC power systems, providing protection against lightning surge overvoltages, electromagnetic pulse induced voltages, operational transients, and resonant overvoltages (<100 μs). It safeguards electrical/electronic equipment and is widely used in power supply protection for:Communication systems，Power grids，Security systems，Transportation infrastructure，Industrial control systems

Compliant Standards:

YD/T 1542.3

Technical Specifications

Product Outline Dimensions: See P15; Ordering Code List: See P28

Product Model	DNU2Z-C40 48V	DNU2Z-C40 240V
Technical Specifications		
Test Category	T2/II/C	T2/II/C
SPD per IEC 61643-31	Class II	Class II
SPD per EN 61643-31	Type 2	Type 2
Nominal Operating Voltage (Un) [V DC]	48	240
Max. Continuous Operating Voltage (Uc) [V DC]	85	300
Nominal Discharge Current (In)[kA]	20	20
Max. Discharge Current (Imax)[kA]	40	40
Impulse Current (Iimp, 10/350 μs)[kA]	- - - - - -	- - - - - -
Voltage Protection Level (Up)	⩽600V	1.4kV
Pole Configuration	1P、2P	1P、2P
Additional Parameters		
Status Indicator	Green (OK)/Red (Defect)	
Alarm Method	Remote Signaling (Optional)	
Response Time	⩽25	
Enclosure Protection Rating	IP20	
Protection Mode	V+/PE, V-/PE, V+/V-	
Structure Type	Plug-in	
Mounting	35 mm standard rail	
Max. Wire Section for Remote Signaling Terminal	1.5 mm^2 (C:Common, NO:Normally Open, NC:Normally Closed)	
Terminal Connection (Copper Conductor)	Multi-core: 1.5 mm^2 ~25 mm^2 | Single-core: 1.5 mm^2 ~35 mm^2	
Torque	Terminal: 2.5 N·m | Remote Signaling Interface: 0.25 N·m	
Remote Contact Operating Parameters (Max.)	AC: 250 V/0.5 A, 125 V/1 A DC: 250 V/0.1 A, 125 V/0.2 A, 75 A/0.5 A	
Operating Conditions		
Ambient Temperature	-40°C～+80°C	
Relative Humidity	⩽95% (at room temperature)	
Altitude	⩽3000 m	
Installation Requirements:	No significant vibration or shock; Tilt angle relative to vertical plane ⩽5%; Avoid explosive atmospheres or environments with corrosive gases/dust (including conductive dust)	

Outline Dimensions

DNU1 Outline Dimensions

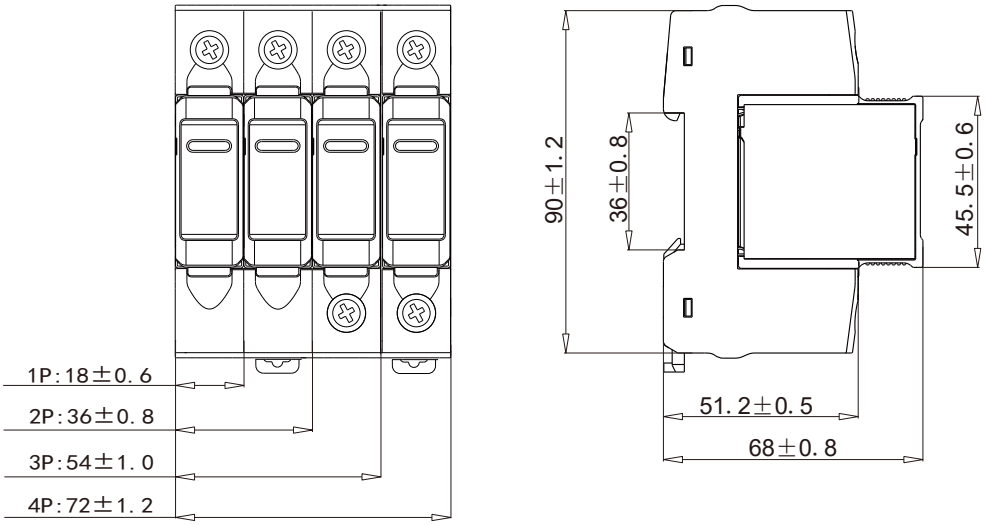

DNU1PV Outline Dimensions

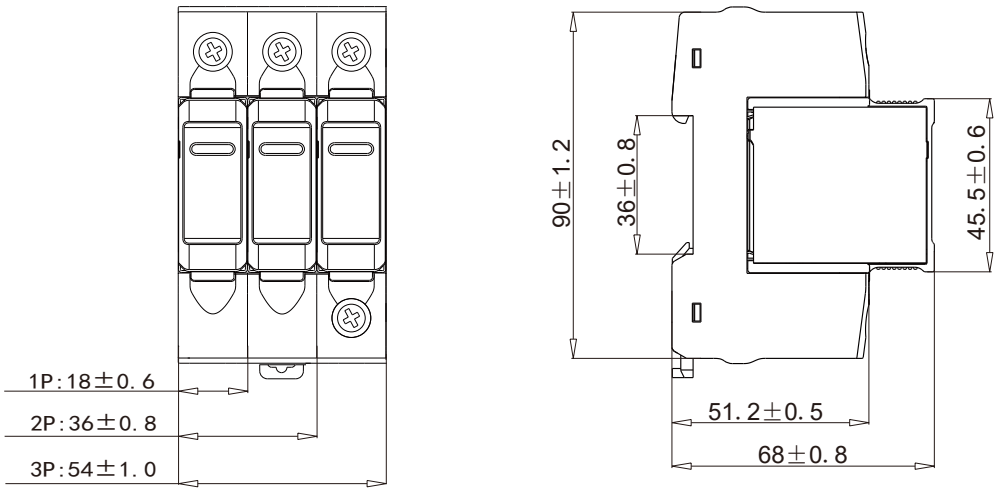

Outline Dimensions

DNU2-C20/C40/C60/C80 Outline Dimensions

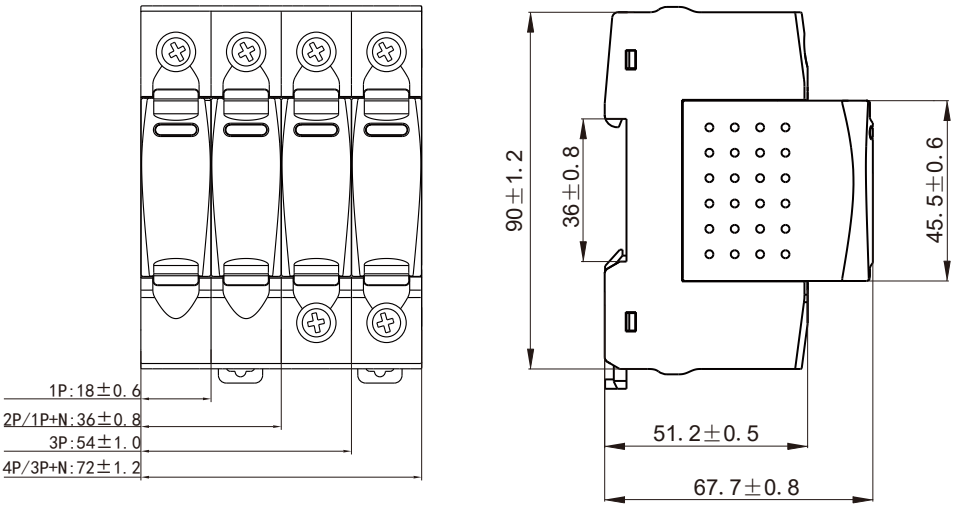

DNU2-C100/C120 Outline Dimensions

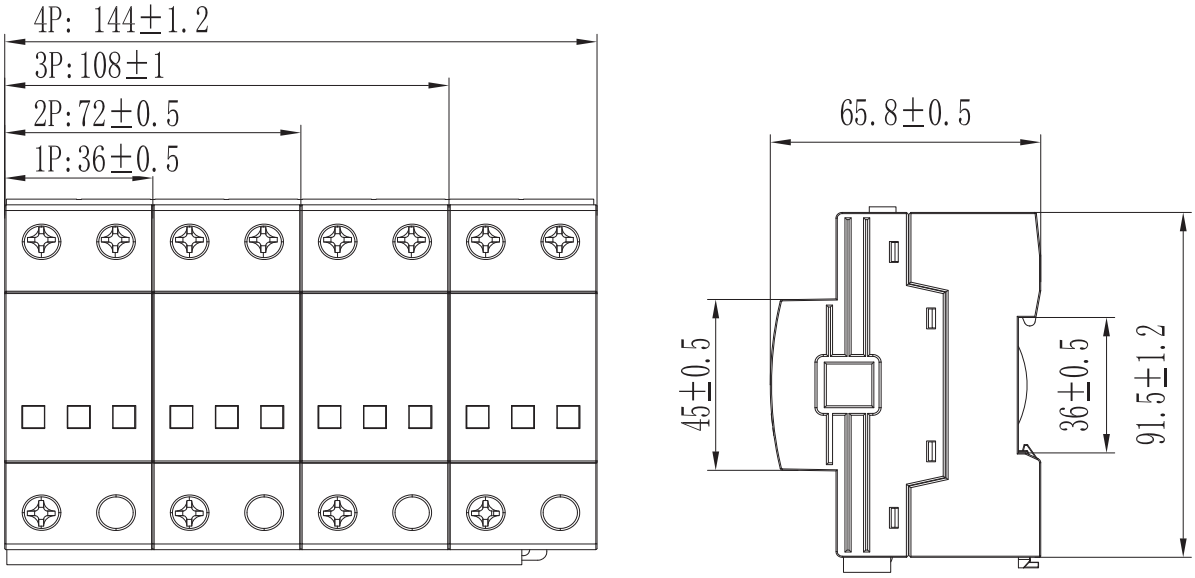

Outline Dimensions

DNU2-B15/B25 Outline Dimensions

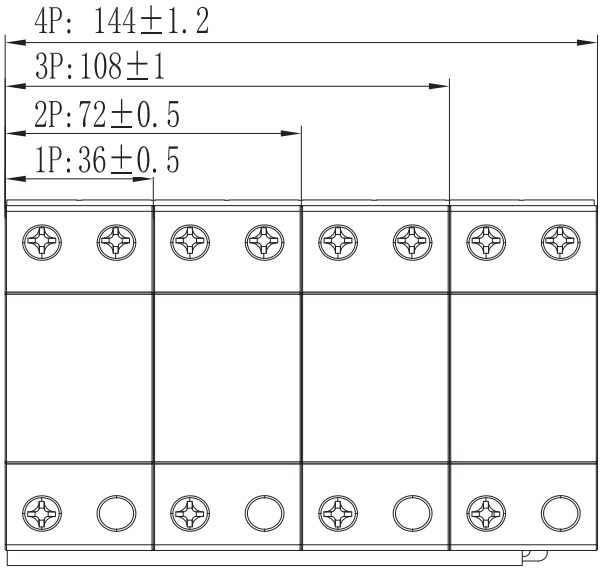

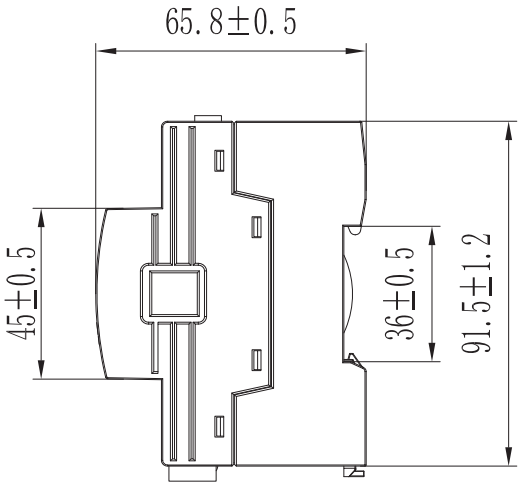

DNU2H-C20/C40/C60/C80 Outline Dimensions

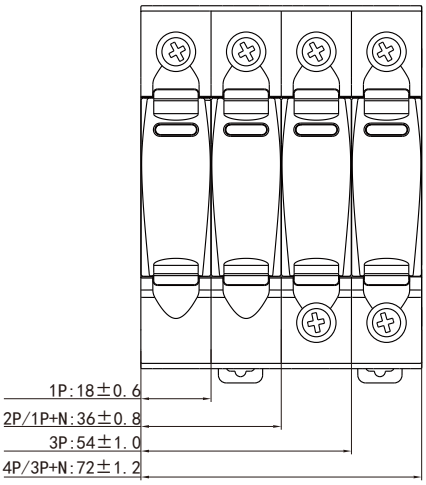

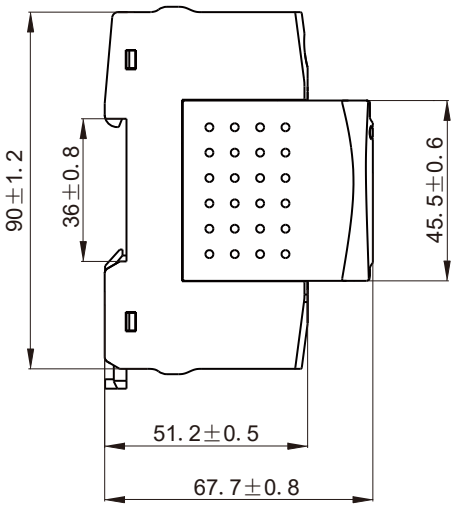

Outline Dimensions

DNU2H-C100/C120 Outline Dimensions

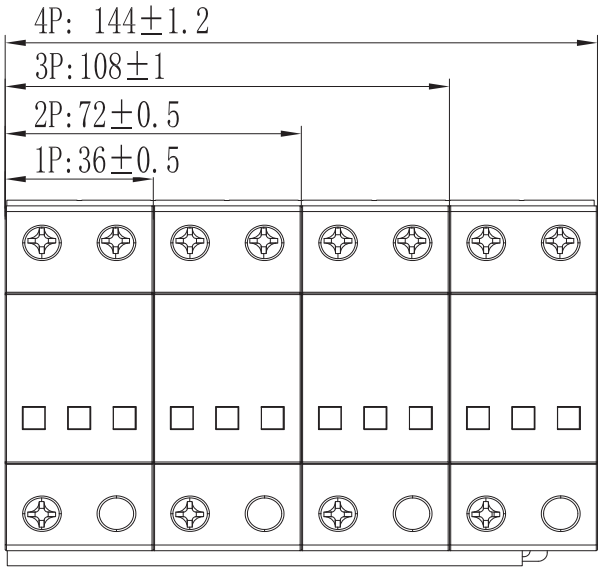

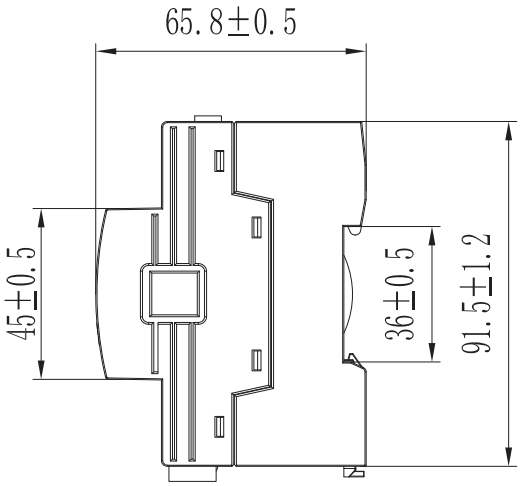

DNU2PV-B+C40/C40 Outline Dimensions

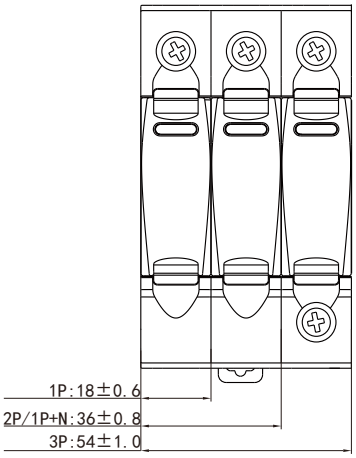

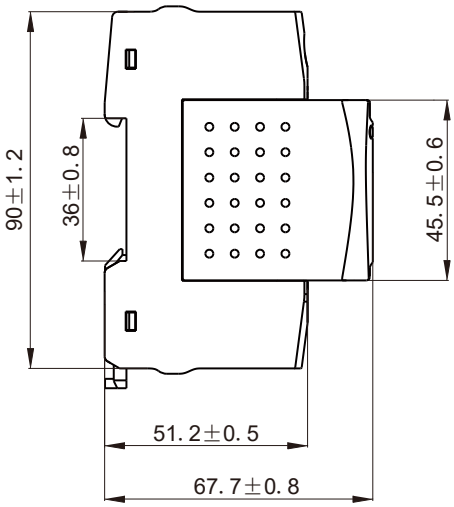

Outline Dimensions

DNU2PVH-B+C40/C40 Outline Dimensions

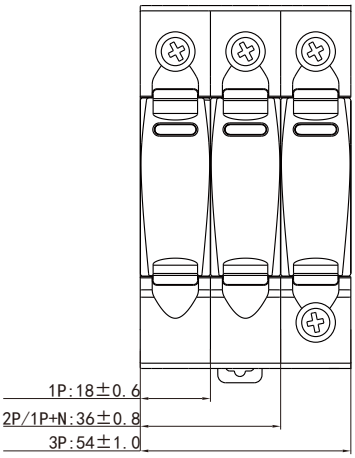

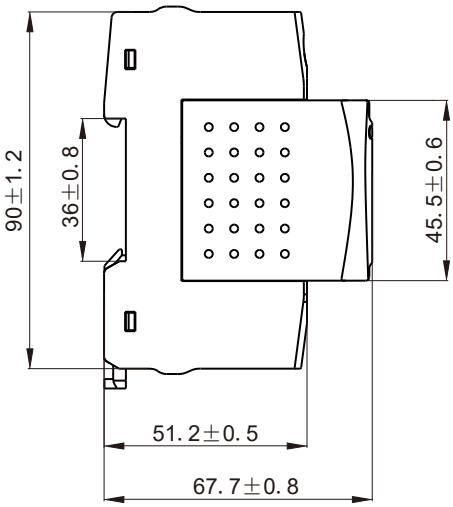

DNU2Z-C40 Outline Dimensions

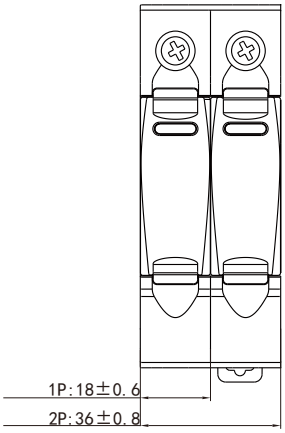

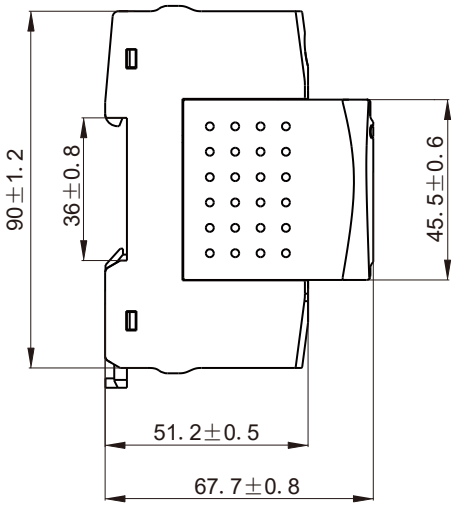

DNU1 Series Product Ordering Codes

1	DNU1-C20 275V 1P	DNU131004
2	DNU1-C20 275V 2P	DNU132004
3	DNU1-C20 275V 3P	DNU133004
4	DNU1-C20 275V 4P	DNU134004
5	DNU1-C20 275V 1P F	DNU131004X
6	DNU1-C20 275V 2P F	DNU132004X
7	DNU1-C20 275V 3P F	DNU133004X
8	DNU1-C20 275V 4P F	DNU134004X
9	DNU1-C20 385V 1P	DNU131001
10	DNU1-C20 385V 2P	DNU132001
11	DNU1-C20 385V 3P	DNU133001
12	DNU1-C20 385V 4P	DNU134001
13	DNU1-C20 385V 1P F	DNU131001X
14	DNU1-C20 385V 2P F	DNU132001X
15	DNU1-C20 385V 3P F	DNU133001X
16	DNU1-C20 385V 4P F	DNU134001X
17	DNU1-C20 440V 1P	DNU131005
18	DNU1-C20 440V 2P	DNU132005
19	DNU1-C20 440V 3P	DNU133005
20	DNU1-C20 440V 4P	DNU134005
21	DNU1-C20 440V 1P F	DNU131005X
22	DNU1-C20 440V 2P F	DNU132005X
23	DNU1-C20 440V 3P F	DNU133005X
24	DNU1-C20 440V 4P F	DNU134005X
25	DNU1-C20 460V 1P	DNU131006
26	DNU1-C20 460V 2P	DNU132006
27	DNU1-C20 460V 3P	DNU133006
28	DNU1-C20 460V 4P	DNU134006
29	DNU1-C20 460V 1P F	DNU131006X
30	DNU1-C20 460V 2P F	DNU132006X
31	DNU1-C20 460V 3P F	DNU133006X
32	DNU1-C20 460V 4P F	DNU134006X
33	DNU1-C20 550V 1P	DNU131007
34	DNU1-C20 550V 2P	DNU132007
35	DNU1-C20 550V 3P	DNU133007
36	DNU1-C20 550V 4P	DNU134007
37	DNU1-C20 550V 1P F	DNU131007X
38	DNU1-C20 550V 2P F	DNU132007X
39	DNU1-C20 550V 3P F	DNU133007X
40	DNU1-C20 550V 4P F	DNU134007X
41	DNU1-C40 275V 1P	DNU131008
42	DNU1-C40 275V 2P	DNU132008
43	DNU1-C40 275V 3P	DNU133008
44	DNU1-C40 275V 4P	DNU134008
45	DNU1-C40 275V 1P F	DNU131008X
46	DNU1-C40 275V 2P F	DNU132008X
47	DNU1-C40 275V 3P F	DNU133008X
48	DNU1-C40 275V 4P F	DNU134008X
49	DNU1-C40 385V 1P	DNU131000
50	DNU1-C40 385V 2P	DNU132000

51	DNU1-C40 385V 3P	DNU133000
52	DNU1-C40 385V 4P	DNU134000
53	DNU1-C40 385V 1P F	DNU131000X
54	DNU1-C40 385V 2P F	DNU132000X
55	DNU1-C40 385V 3P F	DNU133000X
56	DNU1-C40 385V 4P F	DNU134000X
57	DNU1-C40 440V 1P	DNU131009
58	DNU1-C40 440V 2P	DNU132009
59	DNU1-C40 440V 3P	DNU133009
60	DNU1-C40 440V 4P	DNU134009
61	DNU1-C40 440V 1P F	DNU131009X
62	DNU1-C40 440V 2P F	DNU132009X
63	DNU1-C40 440V 3P F	DNU133009X
64	DNU1-C40 440V 4P F	DNU134009X
65	DNU1-C40 460V 1P	DNU131010
66	DNU1-C40 460V 2P	DNU132010
67	DNU1-C40 460V 3P	DNU133010
68	DNU1-C40 460V 4P	DNU134010
69	DNU1-C40 460V 1P F	DNU131010X
70	DNU1-C40 460V 2P F	DNU132010X
71	DNU1-C40 460V 3P F	DNU133010X
72	DNU1-C40 460V 4P F	DNU134010X
73	DNU1-C40 550V 1P	DNU131011
74	DNU1-C40 550V 2P	DNU132011
75	DNU1-C40 550V 3P	DNU133011
76	DNU1-C40 550V 4P	DNU134011
77	DNU1-C40 550V 1P F	DNU131011X
78	DNU1-C40 550V 2P F	DNU132011X
79	DNU1-C40 550V 3P F	DNU133011X
80	DNU1-C40 550V 4P F	DNU134011X
81	DNU1-C60 275V 1P	DNU131012
82	DNU1-C60 275V 2P	DNU132012
83	DNU1-C60 275V 3P	DNU133012
84	DNU1-C60 275V 4P	DNU134012
85	DNU1-C60 275V 1P F	DNU131012X
86	DNU1-C60 275V 2P F	DNU132012X
87	DNU1-C60 275V 3P F	DNU133012X
88	DNU1-C60 275V 4P F	DNU134012X
89	DNU1-C60 385V 1P	DNU131002
90	DNU1-C60 385V 2P	DNU132002
91	DNU1-C60 385V 3P	DNU133002
92	DNU1-C60 385V 4P	DNU134002
93	DNU1-C60 385V 1P F	DNU131002X
94	DNU1-C60 385V 2P F	DNU132002X
95	DNU1-C60 385V 3P F	DNU133002X
96	DNU1-C60 385V 4P F	DNU134002X
97	DNU1-C60 440V 1P	DNU131013
98	DNU1-C60 440V 2P	DNU132013
99	DNU1-C60 440V 3P	DNU133013
100	DNU1-C60 440V 4P	DNU134013

DNU1 Series Product Ordering Codes

101	DNU1-C60 440V 1P F	DNU131013X
102	DNU1-C60 440V 2P F	DNU132013X
103	DNU1-C60 440V 3P F	DNU133013X
104	DNU1-C60 440V 4P F	DNU134013X
105	DNU1-C60 460V 1P	DNU131014
106	DNU1-C60 460V 2P	DNU132014
107	DNU1-C60 460V 3P	DNU133014
108	DNU1-C60 460V 4P	DNU134014
109	DNU1-C60 460V 1P F	DNU131014X
110	DNU1-C60 460V 2P F	DNU132014X
111	DNU1-C60 460V 3P F	DNU133014X
112	DNU1-C60 460V 4P F	DNU134014X
113	DNU1-C60 550V 1P	DNU131015
114	DNU1-C60 550V 2P	DNU132015
115	DNU1-C60 550V 3P	DNU133015
116	DNU1-C60 550V 4P	DNU134015
117	DNU1-C60 550V 1P F	DNU131015X
118	DNU1-C60 550V 2P F	DNU132015X
119	DNU1-C60 550V 3P F	DNU133015X
120	DNU1-C60 550V 4P F	DNU134015X
121	DNU1-C80 275V 1P	DNU131016
122	DNU1-C80 275V 2P	DNU132016
123	DNU1-C80 275V 3P	DNU133016
124	DNU1-C80 275V 4P	DNU134016
125	DNU1-C80 275V 1P F	DNU131016X
126	DNU1-C80 275V 2P F	DNU132016X
127	DNU1-C80 275V 3P F	DNU133016X
128	DNU1-C80 275V 4P F	DNU134016X
129	DNU1-C80 385V 1P	DNU131003
130	DNU1-C80 385V 2P	DNU132003
131	DNU1-C80 385V 3P	DNU133003
132	DNU1-C80 385V 4P	DNU134003
133	DNU1-C80 385V 1P F	DNU131003X
134	DNU1-C80 385V 2P F	DNU132003X
135	DNU1-C80 385V 3P F	DNU133003X
136	DNU1-C80 385V 4P F	DNU134003X
137	DNU1-C80 440V 1P	DNU131017
138	DNU1-C80 440V 2P	DNU132017
139	DNU1-C80 440V 3P	DNU133017
140	DNU1-C80 440V 4P	DNU134017
141	DNU1-C80 440V 1P F	DNU131017X
142	DNU1-C80 440V 2P F	DNU132017X
143	DNU1-C80 440V 3P F	DNU133017X
144	DNU1-C80 440V 4P F	DNU134017X
145	DNU1-C80 460V 1P	DNU131018
146	DNU1-C80 460V 2P	DNU132018
147	DNU1-C80 460V 3P	DNU133018
148	DNU1-C80 460V 4P	DNU134018
149	DNU1-C80 460V 1P F	DNU131018X
150	DNU1-C80 460V 2P F	DNU132018X

151	DNU1-C80 460V 3P F	DNU133018X
152	DNU1-C80 460V 4P F	DNU134018X
153	DNU1-C80 550V 1P	DNU131019
154	DNU1-C80 550V 2P	DNU132019
155	DNU1-C80 550V 3P	DNU133019
156	DNU1-C80 550V 4P	DNU134019
157	DNU1-C80 550V 1P F	DNU131019X
158	DNU1-C80 550V 2P F	DNU132019X
159	DNU1-C80 550V 3P F	DNU133019X
160	DNU1-C80 550V 4P F	DNU134019X
161	DNU1-C100 385V 1P	DNU131020
162	DNU1-C100 385V 2P	DNU132020
163	DNU1-C100 385V 3P	DNU133020
164	DNU1-C100 385V 4P	DNU134020
165	DNU1-C100 385V 1P F	DNU131020X
166	DNU1-C100 385V 2P F	DNU132020X
167	DNU1-C100 385V 3P F	DNU133020X
168	DNU1-C100 385V 4P F	DNU134020X
169	DNU1-C120 385V 1P	DNU131025
170	DNU1-C120 385V 2P	DNU132025
171	DNU1-C120 385V 3P	DNU133025
172	DNU1-C120 385V 4P	DNU134025
173	DNU1-C120 385V 1P F	DNU131025X
174	DNU1-C120 385V 2P F	DNU132025X
175	DNU1-C120 385V 3P F	DNU133025X
176	DNU1-C120 385V 4P F	DNU134025X
177	DNU1-C100 550V 1P	DNU131035
178	DNU1-C100 550V 2P	DNU132035
179	DNU1-C100 550V 3P	DNU133035
180	DNU1-C100 550V 4P	DNU134035
181	DNU1-C100 550V 1P F	DNU131035X
182	DNU1-C100 550V 2P F	DNU132035X
183	DNU1-C100 550V 3P F	DNU133035X
184	DNU1-C100 550V 4P F	DNU134035X
185	DNU1-C120 550V 1P	DNU131039
186	DNU1-C120 550V 2P	DNU132039
187	DNU1-C120 550V 3P	DNU133039
188	DNU1-C120 550V 4P	DNU134039
189	DNU1-C120 550V 1P F	DNU131039X
190	DNU1-C120 550V 2P F	DNU132039X
191	DNU1-C120 550V 3P F	DNU133039X
192	DNU1-C120 550V 4P F	DNU134039X

DNU1PV Series Product Ordering Codes

1	DNU1PV-C40 500V 1P	DNU1PV31020
2	DNU1PV-C40 500V 2P	DNU1PV32020
3	DNU1PV-C40 500V 1P F	DNU1PV31020X
4	DNU1PV-C40 500V 2P F	DNU1PV32020X
5	DNU1PV-C40 600V 1P	DNU1PV31021
6	DNU1PV-C40 600V 2P	DNU1PV32021
7	DNU1PV-C40 600V 1P F	DNU1PV31021X
8	DNU1PV-C40 600V 2P F	DNU1PV32021X
9	DNU1PV-C40 800V 1P	DNU1PV31022
10	DNU1PV-C40 800V 2P	DNU1PV32022
11	DNU1PV-C40 800V 1P F	DNU1PV31022X
12	DNU1PV-C40 800V 2P F	DNU1PV32022X
13	DNU1PV-C40 1000V 3P	DNU1PV33023
14	DNU1PV-C40 1000V 3P F	DNU1PV33023X
15	DNU1PV-C40 1200V 3P	DNU1PV33024
16	DNU1PV-C40 1200V 3P F	DNU1PV33024X
17	DNU1PV-C40 1500V 3P	DNU1PV33025
18	DNU1PV-C40 1500V 3P F	DNU1PV33025X

DNU2 Series Product Ordering Codes

1	DNU2-C20 275V 1P	DNU221004
2	DNU2-C20 275V 2P	DNU222004
3	DNU2-C20 275V 3P	DNU223004
4	DNU2-C20 275V 4P	DNU224004
5	DNU2-C20 275V 1P+N	DNU225004
6	DNU2-C20 275V 3P+N	DNU226004
7	DNU2-C20 275V 1P F	DNU221004X
8	DNU2-C20 275V 2P F	DNU222004X
9	DNU2-C20 275V 3P F	DNU223004X
10	DNU2-C20 275V 4P F	DNU224004X
11	DNU2-C20 275V 1P+N F	DNU225004X
12	DNU2-C20 275V 3P+N F	DNU226004X
13	DNU2-C20 385V 1P	DNU221001
14	DNU2-C20 385V 2P	DNU222001
15	DNU2-C20 385V 3P	DNU223001
16	DNU2-C20 385V 4P	DNU224001
17	DNU2-C20 385V 1P+N	DNU225001
18	DNU2-C20 385V 3P+N	DNU226001
19	DNU2-C20 385V 1P F	DNU221001X
20	DNU2-C20 385V 2P F	DNU222001X
21	DNU2-C20 385V 3P F	DNU223001X
22	DNU2-C20 385V 4P F	DNU224001X
23	DNU2-C20 385V 1P+N F	DNU225001X
24	DNU2-C20 385V 3P+N F	DNU226001X
25	DNU2-C20 440V 1P	DNU221005
26	DNU2-C20 440V 2P	DNU222005
27	DNU2-C20 440V 3P	DNU223005
28	DNU2-C20 440V 4P	DNU224005
29	DNU2-C20 440V 1P+N	DNU225005
30	DNU2-C20 440V 3P+N	DNU226005
31	DNU2-C20 440V 1P F	DNU221005X
32	DNU2-C20 440V 2P F	DNU222005X
33	DNU2-C20 440V 3P F	DNU223005X
34	DNU2-C20 440V 4P F	DNU224005X
35	DNU2-C20 440V 1P+N F	DNU225005X
36	DNU2-C20 440V 3P+N F	DNU226005X
37	DNU2-C20 460V 1P	DNU221006
38	DNU2-C20 460V 2P	DNU222006
39	DNU2-C20 460V 3P	DNU223006
40	DNU2-C20 460V 4P	DNU224006
41	DNU2-C20 460V 1P+N	DNU225006
42	DNU2-C20 460V 3P+N	DNU226006
43	DNU2-C20 460V 1P F	DNU221006X
44	DNU2-C20 460V 2P F	DNU222006X
45	DNU2-C20 460V 3P F	DNU223006X
46	DNU2-C20 460V 4P F	DNU224006X
47	DNU2-C20 460V 1P+N F	DNU225006X
48	DNU2-C20 460V 3P+N F	DNU226006X
49	DNU2-C20 550V 1P	DNU221007
50	DNU2-C20 550V 2P	DNU222007

51	DNU2-C20 550V 3P	DNU223007
52	DNU2-C20 550V 4P	DNU224007
53	DNU2-C20 550V 1P+N	DNU225007
54	DNU2-C20 550V 3P+N	DNU226007
55	DNU2-C20 550V 1P F	DNU221007X
56	DNU2-C20 550V 2P F	DNU222007X
57	DNU2-C20 550V 3P F	DNU223007X
58	DNU2-C20 550V 4P F	DNU224007X
59	DNU2-C20 550V 1P+N F	DNU225007X
60	DNU2-C20 550V 3P+N F	DNU226007X
61	DNU2-C40 275V 1P	DNU221008
62	DNU2-C40 275V 2P	DNU222008
63	DNU2-C40 275V 3P	DNU223008
64	DNU2-C40 275V 4P	DNU224008
65	DNU2-C40 275V 1P+N	DNU225008
66	DNU2-C40 275V 3P+N	DNU226008
67	DNU2-C40 275V 1P F	DNU221008X
68	DNU2-C40 275V 2P F	DNU222008X
69	DNU2-C40 275V 3P F	DNU223008X
70	DNU2-C40 275V 4P F	DNU224008X
71	DNU2-C40 275V 1P+N F	DNU225008X
72	DNU2-C40 275V 3P+N F	DNU226008X
73	DNU2-C40 385V 1P	DNU221000
74	DNU2-C40 385V 2P	DNU222000
75	DNU2-C40 385V 3P	DNU223000
76	DNU2-C40 385V 4P	DNU224000
77	DNU2-C40 385V 1P+N	DNU225000
78	DNU2-C40 385V 3P+N	DNU226000
79	DNU2-C40 385V 1P F	DNU221000X
80	DNU2-C40 385V 2P F	DNU222000X
81	DNU2-C40 385V 3P F	DNU223000X
82	DNU2-C40 385V 4P F	DNU224000X
83	DNU2-C40 385V 1P+N F	DNU225000X
84	DNU2-C40 385V 3P+N F	DNU226000X
85	DNU2-C40 440V 1P	DNU221009
86	DNU2-C40 440V 2P	DNU222009
87	DNU2-C40 440V 3P	DNU223009
88	DNU2-C40 440V 4P	DNU224009
89	DNU2-C40 440V 1P+N	DNU225009
90	DNU2-C40 440V 3P+N	DNU226009
91	DNU2-C40 440V 1P F	DNU221009X
92	DNU2-C40 440V 2P F	DNU222009X
93	DNU2-C40 440V 3P F	DNU223009X
94	DNU2-C40 440V 4P F	DNU224009X
95	DNU2-C40 440V 1P+N F	DNU225009X
96	DNU2-C40 440V 3P+N F	DNU226009X
97	DNU2-C40 460V 1P	DNU221010
98	DNU2-C40 460V 2P	DNU222010
99	DNU2-C40 460V 3P	DNU223010
100	DNU2-C40 460V 4P	DNU224010

DNU2 Series Product Ordering Codes

101	DNU2-C40 460V 1P+N	DNU225010
102	DNU2-C40 460V 3P+N	DNU226010
103	DNU2-C40 460V 1P F	DNU221010X
104	DNU2-C40 460V 2P F	DNU222010X
105	DNU2-C40 460V 3P F	DNU223010X
106	DNU2-C40 460V 4P F	DNU224010X
107	DNU2-C40 460V 1P+N F	DNU225010X
108	DNU2-C40 460V 3P+N F	DNU226010X
109	DNU2-C40 550V 1P	DNU221011
110	DNU2-C40 550V 2P	DNU222011
111	DNU2-C40 550V 3P	DNU223011
112	DNU2-C40 550V 4P	DNU224011
113	DNU2-C40 550V 1P+N	DNU225011
114	DNU2-C40 550V 3P+N	DNU226011
115	DNU2-C40 550V 1P F	DNU221011X
116	DNU2-C40 550V 2P F	DNU222011X
117	DNU2-C40 550V 3P F	DNU223011X
118	DNU2-C40 550V 4P F	DNU224011X
119	DNU2-C40 550V 1P+N F	DNU225011X
120	DNU2-C40 550V 3P+N F	DNU226011X
121	DNU2-C60 275V 1P	DNU221012
122	DNU2-C60 275V 2P	DNU222012
123	DNU2-C60 275V 3P	DNU223012
124	DNU2-C60 275V 4P	DNU224012
125	DNU2-C60 275V 1P+N	DNU225012
126	DNU2-C60 275V 3P+N	DNU226012
127	DNU2-C60 275V 1P F	DNU221012X
128	DNU2-C60 275V 2P F	DNU222012X
129	DNU2-C60 275V 3P F	DNU223012X
130	DNU2-C60 275V 4P F	DNU224012X
131	DNU2-C60 275V 1P+N F	DNU225012X
132	DNU2-C60 275V 3P+N F	DNU226012X
133	DNU2-C60 385V 1P	DNU221002
134	DNU2-C60 385V 2P	DNU222002
135	DNU2-C60 385V 3P	DNU223002
136	DNU2-C60 385V 4P	DNU224002
137	DNU2-C60 385V 1P+N	DNU225002
138	DNU2-C60 385V 3P+N	DNU226002
139	DNU2-C60 385V 1P F	DNU221002X
140	DNU2-C60 385V 2P F	DNU222002X
141	DNU2-C60 385V 3P F	DNU223002X
142	DNU2-C60 385V 4P F	DNU224002X
143	DNU2-C60 385V 1P+N F	DNU225002X
144	DNU2-C60 385V 3P+N F	DNU226002X
145	DNU2-C60 440V 1P	DNU221013
146	DNU2-C60 440V 2P	DNU222013
147	DNU2-C60 440V 3P	DNU223013
148	DNU2-C60 440V 4P	DNU224013
149	DNU2-C60 440V 1P+N	DNU225013
150	DNU2-C60 440V 3P+N	DNU226013

151	DNU2-C60 440V 1P F	DNU221013X
152	DNU2-C60 440V 2P F	DNU222013X
153	DNU2-C60 440V 3P F	DNU223013X
154	DNU2-C60 440V 4P F	DNU224013X
155	DNU2-C60 440V 1P+N F	DNU225013X
156	DNU2-C60 440V 3P+N F	DNU226013X
157	DNU2-C60 460V 1P	DNU221014
158	DNU2-C60 460V 2P	DNU222014
159	DNU2-C60 460V 3P	DNU223014
160	DNU2-C60 460V 4P	DNU224014
161	DNU2-C60 460V 1P+N	DNU225014
162	DNU2-C60 460V 3P+N	DNU226014
163	DNU2-C60 460V 1P F	DNU221014X
164	DNU2-C60 460V 2P F	DNU222014X
165	DNU2-C60 460V 3P F	DNU223014X
166	DNU2-C60 460V 4P F	DNU224014X
167	DNU2-C60 460V 1P+N F	DNU225014X
168	DNU2-C60 460V 3P+N F	DNU226014X
169	DNU2-C60 550V 1P	DNU221015
170	DNU2-C60 550V 2P	DNU222015
171	DNU2-C60 550V 3P	DNU223015
172	DNU2-C60 550V 4P	DNU224015
173	DNU2-C60 550V 1P+N	DNU225015
174	DNU2-C60 550V 3P+N	DNU226015
175	DNU2-C60 550V 1P F	DNU221015X
176	DNU2-C60 550V 2P F	DNU222015X
177	DNU2-C60 550V 3P F	DNU223015X
178	DNU2-C60 550V 4P F	DNU224015X
179	DNU2-C60 550V 1P+N F	DNU225015X
180	DNU2-C60 550V 3P+N F	DNU226015X
181	DNU2-C80 275V 1P	DNU221016
182	DNU2-C80 275V 2P	DNU222016
183	DNU2-C80 275V 3P	DNU223016
184	DNU2-C80 275V 4P	DNU224016
185	DNU2-C80 275V 1P+N	DNU225016
186	DNU2-C80 275V 3P+N	DNU226016
187	DNU2-C80 275V 1P F	DNU221016X
188	DNU2-C80 275V 2P F	DNU222016X
189	DNU2-C80 275V 3P F	DNU223016X
190	DNU2-C80 275V 4P F	DNU224016X
191	DNU2-C80 275V 1P+N F	DNU225016X
192	DNU2-C80 275V 3P+N F	DNU226016X
193	DNU2-C80 385V 1P	DNU221003
194	DNU2-C80 385V 2P	DNU222003
195	DNU2-C80 385V 3P	DNU223003
196	DNU2-C80 385V 4P	DNU224003
197	DNU2-C80 385V 1P+N	DNU225003
198	DNU2-C80 385V 3P+N	DNU226003
199	DNU2-C80 385V 1P F	DNU221003X
200	DNU2-C80 385V 2P F	DNU222003X

DNU2 Series Product Ordering Codes

201	DNU2-C80 385V 3P F	DNU223003X
202	DNU2-C80 385V 4P F	DNU224003X
203	DNU2-C80 385V 1P+N F	DNU225003X
204	DNU2-C80 385V 3P+N F	DNU226003X
205	DNU2-C80 440V 1P	DNU221017
206	DNU2-C80 440V 2P	DNU222017
207	DNU2-C80 440V 3P	DNU223017
208	DNU2-C80 440V 4P	DNU224017
209	DNU2-C80 440V 1P+N	DNU225017
210	DNU2-C80 440V 3P+N	DNU226017
211	DNU2-C80 440V 1P F	DNU221017X
212	DNU2-C80 440V 2P F	DNU222017X
213	DNU2-C80 440V 3P F	DNU223017X
214	DNU2-C80 440V 4P F	DNU224017X
215	DNU2-C80 440V 1P+N F	DNU225017X
216	DNU2-C80 440V 3P+N F	DNU226017X
217	DNU2-C80 460V 1P	DNU221018
218	DNU2-C80 460V 2P	DNU222018
219	DNU2-C80 460V 3P	DNU223018
220	DNU2-C80 460V 4P	DNU224018
221	DNU2-C80 460V 1P+N	DNU225018
222	DNU2-C80 460V 3P+N	DNU226018
223	DNU2-C80 460V 1P F	DNU221018X
224	DNU2-C80 460V 2P F	DNU222018X
225	DNU2-C80 460V 3P F	DNU223018X
226	DNU2-C80 460V 4P F	DNU224018X
227	DNU2-C80 460V 1P+N F	DNU225018X
228	DNU2-C80 460V 3P+N F	DNU226018X
229	DNU2-C80 550V 1P	DNU221019
230	DNU2-C80 550V 2P	DNU222019
231	DNU2-C80 550V 3P	DNU223019
232	DNU2-C80 550V 4P	DNU224019
233	DNU2-C80 550V 1P+N	DNU225019
234	DNU2-C80 550V 3P+N	DNU226019
235	DNU2-C80 550V 1P F	DNU221019X
236	DNU2-C80 550V 2P F	DNU222019X
237	DNU2-C80 550V 3P F	DNU223019X
238	DNU2-C80 550V 4P F	DNU224019X
239	DNU2-C80 550V 1P+N F	DNU225019X
240	DNU2-C80 550V 3P+N F	DNU226019X
241	DNU2-C100 385V 1P	DNU221020
242	DNU2-C100 385V 2P	DNU222020
243	DNU2-C100 385V 3P	DNU223020
244	DNU2-C100 385V 4P	DNU224020
245	DNU2-C100 385V 1P+N	DNU225020
246	DNU2-C100 385V 3P+N	DNU226020
247	DNU2-C100 385V 1P F	DNU221020X
248	DNU2-C100 385V 2P F	DNU222020X
249	DNU2-C100 385V 3P F	DNU223020X
250	DNU2-C100 385V 4P F	DNU224020X

251	DNU2-C100 385V 1P+N F	DNU225020X
252	DNU2-C100 385V 3P+N F	DNU226020X
253	DNU2-C120 385V 1P	DNU221025
254	DNU2-C120 385V 2P	DNU222025
255	DNU2-C120 385V 3P	DNU223025
256	DNU2-C120 385V 4P	DNU224025
257	DNU2-C120 385V 1P+N	DNU225025
258	DNU2-C120 385V 3P+N	DNU226025
259	DNU2-C120 385V 1P F	DNU221025X
260	DNU2-C120 385V 2P F	DNU222025X
261	DNU2-C120 385V 3P F	DNU223025X
262	DNU2-C120 385V 4P F	DNU224025X
263	DNU2-C120 385V 1P+N F	DNU225025X
264	DNU2-C120 385V 3P+N F	DNU226025X
265	DNU2-C100 550V 1P	DNU221035
266	DNU2-C100 550V 2P	DNU222035
267	DNU2-C100 550V 3P	DNU223035
268	DNU2-C100 550V 4P	DNU224035
269	DNU2-C100 550V 1P+N	DNU225035
270	DNU2-C100 550V 3P+N	DNU226035
271	DNU2-C100 550V 1P F	DNU221035X
272	DNU2-C100 550V 2P F	DNU222035X
273	DNU2-C100 550V 3P F	DNU223035X
274	DNU2-C100 550V 4P F	DNU224035X
275	DNU2-C100 550V 1P+N F	DNU225035X
276	DNU2-C100 550V 3P+N F	DNU226035X
277	DNU2-C120 550V 1P	DNU221039
278	DNU2-C120 550V 2P	DNU222039
279	DNU2-C120 550V 3P	DNU223039
280	DNU2-C120 550V 4P	DNU224039
281	DNU2-C120 550V 1P+N	DNU225039
282	DNU2-C120 550V 3P+N	DNU226039
283	DNU2-C120 550V 1P F	DNU221039X
284	DNU2-C120 550V 2P F	DNU222039X
285	DNU2-C120 550V 3P F	DNU223039X
286	DNU2-C120 550V 4P F	DNU224039X
287	DNU2-C120 550V 1P+N F	DNU225039X
288	DNU2-C120 550V 3P+N F	DNU226039X
289	DNU2-B15 275V 1P	DNU211040
290	DNU2-B15 275V 2P	DNU212040
291	DNU2-B15 275V 3P	DNU213040
292	DNU2-B15 275V 4P	DNU214040
293	DNU2-B15 385V 1P	DNU211041
294	DNU2-B15 385V 2P	DNU212041
295	DNU2-B15 385V 3P	DNU213041
296	DNU2-B15 385V 4P	DNU214042
297	DNU2-B15 440V 1P	DNU211043
298	DNU2-B15 440V 2P	DNU212043
299	DNU2-B15 440V 3P	DNU213043
300	DNU2-B15 440V 4P	DNU214043

DNU2 Series Product Ordering Codes

301	DNU2-B25 275V 1P	DNU211044
302	DNU2-B25 275V 2P	DNU212044
303	DNU2-B25 275V 3P	DNU213044
304	DNU2-B25 275V 4P	DNU214044
305	DNU2-B25 385V 1P	DNU211045
306	DNU2-B25 385V 2P	DNU212045
307	DNU2-B25 385V 3P	DNU213045
308	DNU2-B25 385V 4P	DNU214045
309	DNU2-B25 440V 1P	DNU211046
310	DNU2-B25 440V 2P	DNU212046
311	DNU2-B25 440V 3P	DNU213046
312	DNU2-B25 440V 4P	DNU214046

DNU2H Series Product Ordering Codes

1	DNU2H-C20 275V 1P	DNU211004
2	DNU2H-C20 275V 2P	DNU212004
3	DNU2H-C20 275V 3P	DNU213004
4	DNU2H-C20 275V 4P	DNU214004
5	DNU2H-C20 275V 1P+N	DNU215004
6	DNU2H-C20 275V 3P+N	DNU216004
7	DNU2H-C20 275V 1P F	DNU211004X
8	DNU2H-C20 275V 2P F	DNU212004X
9	DNU2H-C20 275V 3P F	DNU213004X
10	DNU2H-C20 275V 4P F	DNU214004X
11	DNU2H-C20 275V 1P+N F	DNU215004X
12	DNU2H-C20 275V 3P+N F	DNU216004X
13	DNU2H-C20 385V 1P	DNU211001
14	DNU2H-C20 385V 2P	DNU212001
15	DNU2H-C20 385V 3P	DNU213001
16	DNU2H-C20 385V 4P	DNU214001
17	DNU2H-C20 385V 1P+N	DNU215001
18	DNU2H-C20 385V 3P+N	DNU216001
19	DNU2H-C20 385V 1P F	DNU211001X
20	DNU2H-C20 385V 2P F	DNU212001X
21	DNU2H-C20 385V 3P F	DNU213001X
22	DNU2H-C20 385V 4P F	DNU214001X
23	DNU2H-C20 385V 1P+N F	DNU215001X
24	DNU2H-C20 385V 3P+N F	DNU216001X
25	DNU2H-C20 440V 1P	DNU211005
26	DNU2H-C20 440V 2P	DNU212005
27	DNU2H-C20 440V 3P	DNU213005
28	DNU2H-C20 440V 4P	DNU214005
29	DNU2H-C20 440V 1P+N	DNU215005
30	DNU2H-C20 440V 3P+N	DNU216005
31	DNU2H-C20 440V 1P F	DNU211005X
32	DNU2H-C20 440V 2P F	DNU212005X
33	DNU2H-C20 440V 3P F	DNU213005X
34	DNU2H-C20 440V 4P F	DNU214005X
35	DNU2H-C20 440V 1P+N F	DNU215005X
36	DNU2H-C20 440V 3P+N F	DNU216005X
37	DNU2H-C20 460V 1P	DNU211006
38	DNU2H-C20 460V 2P	DNU212006
39	DNU2H-C20 460V 3P	DNU213006
40	DNU2H-C20 460V 4P	DNU214006
41	DNU2H-C20 460V 1P+N	DNU215006
42	DNU2H-C20 460V 3P+N	DNU216006
43	DNU2H-C20 460V 1P F	DNU211006X
44	DNU2H-C20 460V 2P F	DNU212006X
45	DNU2H-C20 460V 3P F	DNU213006X
46	DNU2H-C20 460V 4P F	DNU214006X
47	DNU2H-C20 460V 1P+N F	DNU215006X
48	DNU2H-C20 460V 3P+N F	DNU216006X
49	DNU2H-C20 550V 1P	DNU211007
50	DNU2H-C20 550V 2P	DNU212007

51	DNU2H-C20 550V 3P	DNU213007
52	DNU2H-C20 550V 4P	DNU214007
53	DNU2H-C20 550V 1P+N	DNU215007
54	DNU2H-C20 550V 3P+N	DNU216007
55	DNU2H-C20 550V 1P F	DNU211007X
56	DNU2H-C20 550V 2P F	DNU212007X
57	DNU2H-C20 550V 3P F	DNU213007X
58	DNU2H-C20 550V 4P F	DNU214007X
59	DNU2H-C20 550V 1P+N F	DNU215007X
60	DNU2H-C20 550V 3P+N F	DNU216007X
61	DNU2H-C40 275V 1P	DNU211008
62	DNU2H-C40 275V 2P	DNU212008
63	DNU2H-C40 275V 3P	DNU213008
64	DNU2H-C40 275V 4P	DNU214008
65	DNU2H-C40 275V 1P+N	DNU215008
66	DNU2H-C40 275V 3P+N	DNU216008
67	DNU2H-C40 275V 1P F	DNU211008X
68	DNU2H-C40 275V 2P F	DNU212008X
69	DNU2H-C40 275V 3P F	DNU213008X
70	DNU2H-C40 275V 4P F	DNU214008X
71	DNU2H-C40 275V 1P+N F	DNU215008X
72	DNU2H-C40 275V 3P+N F	DNU216008X
73	DNU2H-C40 385V 1P	DNU211000
74	DNU2H-C40 385V 2P	DNU212000
75	DNU2H-C40 385V 3P	DNU213000
76	DNU2H-C40 385V 4P	DNU214000
77	DNU2H-C40 385V 1P+N	DNU215000
78	DNU2H-C40 385V 3P+N	DNU216000
79	DNU2H-C40 385V 1P F	DNU211000X
80	DNU2H-C40 385V 2P F	DNU212000X
81	DNU2H-C40 385V 3P F	DNU213000X
82	DNU2H-C40 385V 4P F	DNU214000X
83	DNU2H-C40 385V 1P+N F	DNU215000X
84	DNU2H-C40 385V 3P+N F	DNU216000X
85	DNU2H-C40 440V 1P	DNU211009
86	DNU2H-C40 440V 2P	DNU212009
87	DNU2H-C40 440V 3P	DNU213009
88	DNU2H-C40 440V 4P	DNU214009
89	DNU2H-C40 440V 1P+N	DNU215009
90	DNU2H-C40 440V 3P+N	DNU216009
91	DNU2H-C40 440V 1P F	DNU211009X
92	DNU2H-C40 440V 2P F	DNU212009X
93	DNU2H-C40 440V 3P F	DNU213009X
94	DNU2H-C40 440V 4P F	DNU214009X
95	DNU2H-C40 440V 1P+N F	DNU215009X
96	DNU2H-C40 440V 3P+N F	DNU216009X
97	DNU2H-C40 460V 1P	DNU211010
98	DNU2H-C40 460V 2P	DNU212010
99	DNU2H-C40 460V 3P	DNU213010
100	DNU2H-C40 460V 4P	DNU214010

DNU2H Series Product Ordering Codes

101	DNU2H-C40 460V 1P+N	DNU215010
102	DNU2H-C40 460V 3P+N	DNU216010
103	DNU2H-C40 460V 1P F	DNU211010X
104	DNU2H-C40 460V 2P F	DNU212010X
105	DNU2H-C40 460V 3P F	DNU213010X
106	DNU2H-C40 460V 4P F	DNU214010X
107	DNU2H-C40 460V 1P+N F	DNU215010X
108	DNU2H-C40 460V 3P+N F	DNU216010X
109	DNU2H-C40 550V 1P	DNU211011
110	DNU2H-C40 550V 2P	DNU212011
111	DNU2H-C40 550V 3P	DNU213011
112	DNU2H-C40 550V 4P	DNU214011
113	DNU2H-C40 550V 1P+N	DNU215011
114	DNU2H-C40 550V 3P+N	DNU216011
115	DNU2H-C40 550V 1P F	DNU211011X
116	DNU2H-C40 550V 2P F	DNU212011X
117	DNU2H-C40 550V 3P F	DNU213011X
118	DNU2H-C40 550V 4P F	DNU214011X
119	DNU2H-C40 550V 1P+N F	DNU215011X
120	DNU2H-C40 550V 3P+N F	DNU216011X
121	DNU2H-C60 275V 1P	DNU211012
122	DNU2H-C60 275V 2P	DNU212012
123	DNU2H-C60 275V 3P	DNU213012
124	DNU2H-C60 275V 4P	DNU214012
125	DNU2H-C60 275V 1P+N	DNU215012
126	DNU2H-C60 275V 3P+N	DNU216012
127	DNU2H-C60 275V 1P F	DNU211012X
128	DNU2H-C60 275V 2P F	DNU212012X
129	DNU2H-C60 275V 3P F	DNU213012X
130	DNU2H-C60 275V 4P F	DNU214012X
131	DNU2H-C60 275V 1P+N F	DNU215012X
132	DNU2H-C60 275V 3P+N F	DNU216012X
133	DNU2H-C60 385V 1P	DNU211002
134	DNU2H-C60 385V 2P	DNU212002
135	DNU2H-C60 385V 3P	DNU213002
136	DNU2H-C60 385V 4P	DNU214002
137	DNU2H-C60 385V 1P+N	DNU215002
138	DNU2H-C60 385V 3P+N	DNU216002
139	DNU2H-C60 385V 1P F	DNU211002X
140	DNU2H-C60 385V 2P F	DNU212002X
141	DNU2H-C60 385V 3P F	DNU213002X
142	DNU2H-C60 385V 4P F	DNU214002X
143	DNU2H-C60 385V 1P+N F	DNU215002X
144	DNU2H-C60 385V 3P+N F	DNU216002X
145	DNU2H-C60 440V 1P	DNU211013
146	DNU2H-C60 440V 2P	DNU212013
147	DNU2H-C60 440V 3P	DNU213013
148	DNU2H-C60 440V 4P	DNU214013
149	DNU2H-C60 440V 1P+N	DNU215013
150	DNU2H-C60 440V 3P+N	DNU216013

151	DNU2H-C60 440V 1P F	DNU211013X
152	DNU2H-C60 440V 2P F	DNU212013X
153	DNU2H-C60 440V 3P F	DNU213013X
154	DNU2H-C60 440V 4P F	DNU214013X
155	DNU2H-C60 440V 1P+N F	DNU215013X
156	DNU2H-C60 440V 3P+N F	DNU216013X
157	DNU2H-C60 460V 1P	DNU211014
158	DNU2H-C60 460V 2P	DNU212014
159	DNU2H-C60 460V 3P	DNU213014
160	DNU2H-C60 460V 4P	DNU214014
161	DNU2H-C60 460V 1P+N	DNU215014
162	DNU2H-C60 460V 3P+N	DNU216014
163	DNU2H-C60 460V 1P F	DNU211014X
164	DNU2H-C60 460V 2P F	DNU212014X
165	DNU2H-C60 460V 3P F	DNU213014X
166	DNU2H-C60 460V 4P F	DNU214014X
167	DNU2H-C60 460V 1P+N F	DNU215014X
168	DNU2H-C60 460V 3P+N F	DNU216014X
169	DNU2H-C60 550V 1P	DNU211015
170	DNU2H-C60 550V 2P	DNU212015
171	DNU2H-C60 550V 3P	DNU213015
172	DNU2H-C60 550V 4P	DNU214015
173	DNU2H-C60 550V 1P+N	DNU215015
174	DNU2H-C60 550V 3P+N	DNU216015
175	DNU2H-C60 550V 1P F	DNU211015X
176	DNU2H-C60 550V 2P F	DNU212015X
177	DNU2H-C60 550V 3P F	DNU213015X
178	DNU2H-C60 550V 4P F	DNU214015X
179	DNU2H-C60 550V 1P+N F	DNU215015X
180	DNU2H-C60 550V 3P+N F	DNU216015X
181	DNU2H-C80 275V 1P	DNU211016
182	DNU2H-C80 275V 2P	DNU212016
183	DNU2H-C80 275V 3P	DNU213016
184	DNU2H-C80 275V 4P	DNU214016
185	DNU2H-C80 275V 1P+N	DNU215016
186	DNU2H-C80 275V 3P+N	DNU216016
187	DNU2H-C80 275V 1P F	DNU211016X
188	DNU2H-C80 275V 2P F	DNU212016X
189	DNU2H-C80 275V 3P F	DNU213016X
190	DNU2H-C80 275V 4P F	DNU214016X
191	DNU2H-C80 275V 1P+N F	DNU215016X
192	DNU2H-C80 275V 3P+N F	DNU216016X
193	DNU2H-C80 385V 1P	DNU211003
194	DNU2H-C80 385V 2P	DNU212003
195	DNU2H-C80 385V 3P	DNU213003
196	DNU2H-C80 385V 4P	DNU214003
197	DNU2H-C80 385V 1P+N	DNU215003
198	DNU2H-C80 385V 3P+N	DNU216003
199	DNU2H-C80 385V 1P F	DNU211003X
200	DNU2H-C80 385V 2P F	DNU212003X

DNU2H Series Product Ordering Codes

201	DNU2H-C80 385V 3P F	DNU213003X
202	DNU2H-C80 385V 4P F	DNU214003X
203	DNU2H-C80 385V 1P+N F	DNU215003X
204	DNU2H-C80 385V 3P+N F	DNU216003X
205	DNU2H-C80 440V 1P	DNU211017
206	DNU2H-C80 440V 2P	DNU212017
207	DNU2H-C80 440V 3P	DNU213017
208	DNU2H-C80 440V 4P	DNU214017
209	DNU2H-C80 440V 1P+N	DNU215017
210	DNU2H-C80 440V 3P+N	DNU216017
211	DNU2H-C80 440V 1P F	DNU211017X
212	DNU2H-C80 440V 2P F	DNU212017X
213	DNU2H-C80 440V 3P F	DNU213017X
214	DNU2H-C80 440V 4P F	DNU214017X
215	DNU2H-C80 440V 1P+N F	DNU215017X
216	DNU2H-C80 440V 3P+N F	DNU216017X
217	DNU2H-C80 460V 1P	DNU211018
218	DNU2H-C80 460V 2P	DNU212018
219	DNU2H-C80 460V 3P	DNU213018
220	DNU2H-C80 460V 4P	DNU214018
221	DNU2H-C80 460V 1P+N	DNU215018
222	DNU2H-C80 460V 3P+N	DNU216018
223	DNU2H-C80 460V 1P F	DNU211018X
224	DNU2H-C80 460V 2P F	DNU212018X
225	DNU2H-C80 460V 3P F	DNU213018X
226	DNU2H-C80 460V 4P F	DNU214018X
227	DNU2H-C80 460V 1P+N F	DNU215018X
228	DNU2H-C80 460V 3P+N F	DNU216018X
229	DNU2H-C80 550V 1P	DNU211019
230	DNU2H-C80 550V 2P	DNU212019
231	DNU2H-C80 550V 3P	DNU213019
232	DNU2H-C80 550V 4P	DNU214019
233	DNU2H-C80 550V 1P+N	DNU215019
234	DNU2H-C80 550V 3P+N	DNU216019
235	DNU2H-C80 550V 1P F	DNU211019X
236	DNU2H-C80 550V 2P F	DNU212019X
237	DNU2H-C80 550V 3P F	DNU213019X
238	DNU2H-C80 550V 4P F	DNU214019X
239	DNU2H-C80 550V 1P+N F	DNU215019X
240	DNU2H-C80 550V 3P+N F	DNU216019X
241	DNU2H-C100 385V 1P	DNU211020
242	DNU2H-C100 385V 2P	DNU212020
243	DNU2H-C100 385V 3P	DNU213020
244	DNU2H-C100 385V 4P	DNU214020
245	DNU2H-C100 385V 1P+N	DNU215020
246	DNU2H-C100 385V 3P+N	DNU216020
247	DNU2H-C100 385V 1P F	DNU211020X
248	DNU2H-C100 385V 2P F	DNU212020X
249	DNU2H-C100 385V 3P F	DNU213020X
250	DNU2H-C100 385V 4P F	DNU214020X

251	DNU2H-C100 385V 1P+N F	DNU215020X
252	DNU2H-C100 385V 3P+N F	DNU216020X
253	DNU2H-C120 385V 1P	DNU211025
254	DNU2H-C120 385V 2P	DNU212025
255	DNU2H-C120 385V 3P	DNU213025
256	DNU2H-C120 385V 4P	DNU214025
257	DNU2H-C120 385V 1P+N	DNU215025
258	DNU2H-C120 385V 3P+N	DNU216025
259	DNU2H-C120 385V 1P F	DNU211025X
260	DNU2H-C120 385V 2P F	DNU212025X
261	DNU2H-C120 385V 3P F	DNU213025X
262	DNU2H-C120 385V 4P F	DNU214025X
263	DNU2H-C120 385V 1P+N F	DNU215025X
264	DNU2H-C120 385V 3P+N F	DNU216025X
265	DNU2H-C100 550V 1P	DNU211035
266	DNU2H-C100 550V 2P	DNU212035
267	DNU2H-C100 550V 3P	DNU213035
268	DNU2H-C100 550V 4P	DNU214035
269	DNU2H-C100 550V 1P+N	DNU215035
270	DNU2H-C100 550V 3P+N	DNU216035
271	DNU2H-C100 550V 1P F	DNU211035X
272	DNU2H-C100 550V 2P F	DNU212035X
273	DNU2H-C100 550V 3P F	DNU213035X
274	DNU2H-C100 550V 4P F	DNU214035X
275	DNU2H-C100 550V 1P+N F	DNU215035X
276	DNU2H-C100 550V 3P+N F	DNU216035X
277	DNU2H-C120 550V 1P	DNU211039
278	DNU2H-C120 550V 2P	DNU212039
279	DNU2H-C120 550V 3P	DNU213039
280	DNU2H-C120 550V 4P	DNU214039
281	DNU2H-C120 550V 1P+N	DNU215039
282	DNU2H-C120 550V 3P+N	DNU216039
283	DNU2H-C120 550V 1P F	DNU211039X
284	DNU2H-C120 550V 2P F	DNU212039X
285	DNU2H-C120 550V 3P F	DNU213039X
286	DNU2H-C120 550V 4P F	DNU214039X
287	DNU2H-C120 550V 1P+N F	DNU215039X
288	DNU2H-C120 550V 3P+N F	DNU216039X

DNU2PV Series Product Ordering Codes

1	DNU2PV-B+C40 500V 1P	DNU2PV21000
2	DNU2PV-B+C40 500V 2P	DNU2PV22000
3	DNU2PV-B+C40 500V 1P F	DNU2PV21000X
4	DNU2PV-B+C40 500V 2P F	DNU2PV22000X
5	DNU2PV-B+C40 600V 1P	DNU2PV21001
6	DNU2PV-B+C40 600V 2P	DNU2PV22001
7	DNU2PV-B+C40 600V 1P F	DNU2PV21001X
8	DNU2PV-B+C40 600V 2P F	DNU2PV22001X
9	DNU2PV-B+C40 800V 1P	DNU2PV21002
10	DNU2PV-B+C40 800V 2P	DNU2PV22002
11	DNU2PV-B+C40 800V 1P F	DNU2PV21002X
12	DNU2PV-B+C40 800V 2P F	DNU2PV22002X
13	DNU2PV-B+C40 1000V 3P	DNU2PV23003
14	DNU2PV-B+C40 1000V 3P F	DNU2PV23003X
15	DNU2PV-B+C40 1200V 3P	DNU2PV23004
16	DNU2PV-B+C40 1200V 3P F	DNU2PV23004X
17	DNU2PV-B+C40 1500V 3P	DNU2PV23005
18	DNU2PV-B+C40 1500V 3P F	DNU2PV23005X
19	DNU2PV-C40 500V 1P	DNU2PV21006
20	DNU2PV-C40 500V 2P	DNU2PV22006
21	DNU2PV-C40 500V 1P F	DNU2PV21006X
22	DNU2PV-C40 500V 2P F	DNU2PV22006X
23	DNU2PV-C40 600V 1P	DNU2PV21007
24	DNU2PV-C40 600V 2P	DNU2PV22007
25	DNU2PV-C40 600V 1P F	DNU2PV21007X
26	DNU2PV-C40 600V 2P F	DNU2PV22007X
27	DNU2PV-C40 800V 1P	DNU2PV21008
28	DNU2PV-C40 800V 2P	DNU2PV22008
29	DNU2PV-C40 800V 1P F	DNU2PV21008X
30	DNU2PV-C40 800V 2P F	DNU2PV22008X
31	DNU2PV-C40 1000V 3P	DNU2PV23009
32	DNU2PV-C40 1000V 3P F	DNU2PV23009X
33	DNU2PV-C40 1200V 3P	DNU2PV23010
34	DNU2PV-C40 1200V 3P F	DNU2PV23010X
35	DNU2PV-C40 1500V 3P	DNU2PV23011
36	DNU2PV-C40 1500V 3P F	DNU2PV23011X

DNU2PVH Series Product Ordering Codes

1	DNU2PVH-B+C40 500V 1P	DNU2PV11000
2	DNU2PVH-B+C40 500V 2P	DNU2PV12000
3	DNU2PVH-B+C40 500V 1P F	DNU2PV11000X
4	DNU2PVH-B+C40 500V 2P F	DNU2PV12000X
5	DNU2PVH-B+C40 600V 1P	DNU2PV11001
6	DNU2PVH-B+C40 600V 2P	DNU2PV12001
7	DNU2PVH-B+C40 600V 1P F	DNU2PV11001X
8	DNU2PVH-B+C40 600V 2P F	DNU2PV12001X
9	DNU2PVH-B+C40 800V 1P	DNU2PV11002
10	DNU2PVH-B+C40 800V 2P	DNU2PV12002
11	DNU2PVH-B+C40 800V 1P F	DNU2PV11002X
12	DNU2PVH-B+C40 800V 2P F	DNU2PV12002X
13	DNU2PVH-B+C40 1000V 3P	DNU2PV13003
14	DNU2PVH-B+C40 1000V 3P F	DNU2PV13003X
15	DNU2PVH-B+C40 1200V 3P	DNU2PV13004
16	DNU2PVH-B+C40 1200V 3P F	DNU2PV13004X
17	DNU2PVH-B+C40 1500V 3P	DNU2PV13005
18	DNU2PVH-B+C40 1500V 3P F	DNU2PV13005X
19	DNU2PVH-C40 500V 1P	DNU2PV11006
20	DNU2PVH-C40 500V 2P	DNU2PV12006
21	DNU2PVH-C40 500V 1P F	DNU2PV11006X
22	DNU2PVH-C40 500V 2P F	DNU2PV12006X
23	DNU2PVH-C40 600V 1P	DNU2PV11007
24	DNU2PVH-C40 600V 2P	DNU2PV12007
25	DNU2PVH-C40 600V 1P F	DNU2PV11007X
26	DNU2PVH-C40 600V 2P F	DNU2PV12007X
27	DNU2PVH-C40 800V 1P	DNU2PV11008
28	DNU2PVH-C40 800V 2P	DNU2PV12008
29	DNU2PVH-C40 800V 1P F	DNU2PV11008X
30	DNU2PVH-C40 800V 2P F	DNU2PV12008X
31	DNU2PVH-C40 1000V 3P	DNU2PV13009
32	DNU2PVH-C40 1000V 3P F	DNU2PV13009X
33	DNU2PVH-C40 1200V 3P	DNU2PV13010
34	DNU2PVH-C40 1200V 3P F	DNU2PV13010X
35	DNU2PVH-C40 1500V 3P	DNU2PV13011
36	DNU2PVH-C40 1500V 3P F	DNU2PV13011X

DNU2Z Series Product Ordering Codes

1	DNU2Z-C40 48V 2P	DNU2Z11000
2	DNU2Z-C40-F 48V 2P	DNU2Z11000X
3	DNU2Z-C40 240V 2P	DNU2Z12000
4	DNU2Z-C40-F 240V 2P	DNU2Z12000X

GRL ELECTRIC

Visionaries win the future

Website: **www.grlgroup.com**
E-mail Number: **tim@grlele.com**

Phone: **+86-13757783569**
WhatsApp: **+86 13757783569**

Zhejiang GRL Electric Co., Ltd.
No.66, Punan 5 Road, Wengyang Town,Yueqing City 325604, Zhejiang,China

This product manual is printed by GRL ,It is only used to explain the relevant information of this series of products.The information might be updated base on the technical upgrade or update, GRL holds the right to update the manual without prior notice. Welcome to contact GRL for more details.

GRL Electric All Rights Reserved. 金莱勒电气拥有最终解释权。